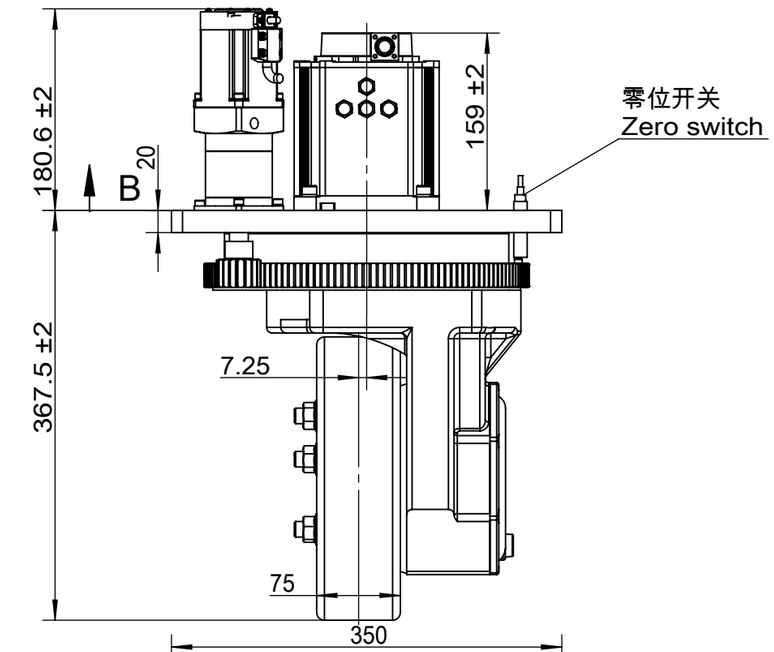

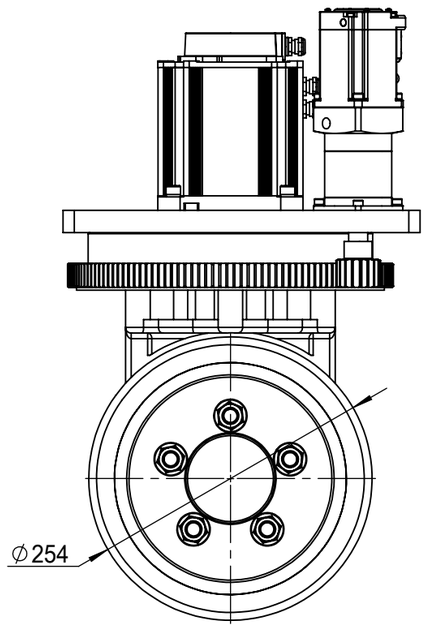

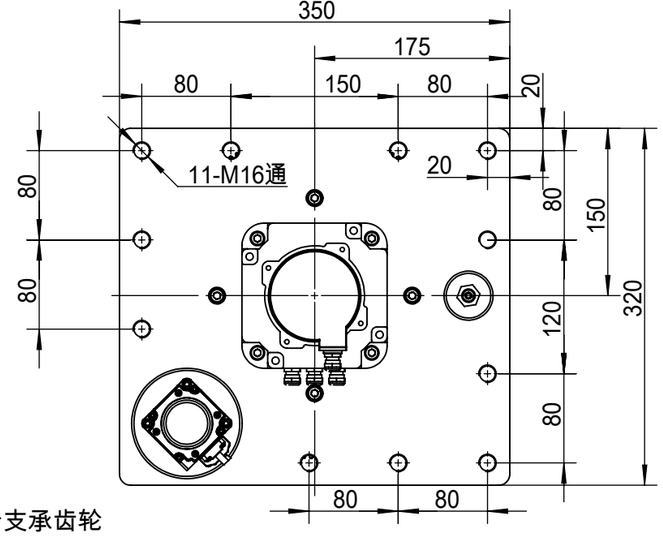

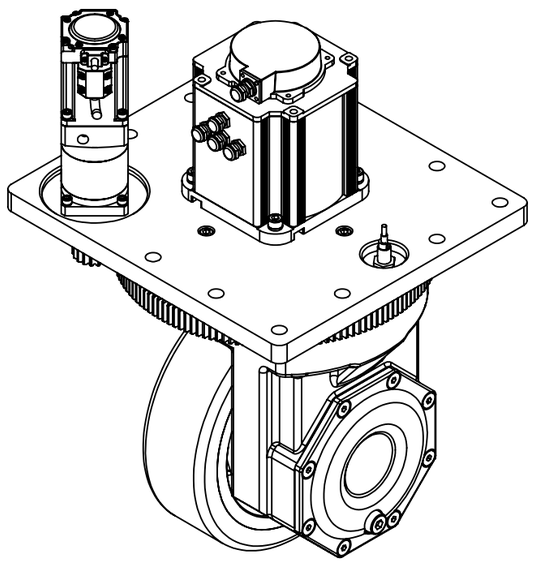

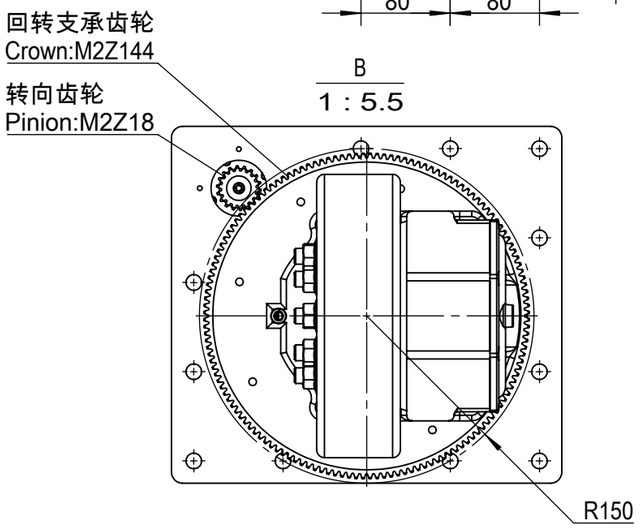

1	行走部分Drive unit		
2	电机类型Motor type	伺服电机Servo motor	
3	额定电压Rated Voltage	V DC	48
4	额定功率Rated power	W	1570
5	额定扭矩Rated torque	N.m	5
6	峰值扭矩Peak torque	N.m	15
7	额定转速Rated speed	rpm	3000
8	额定电流Rated Current	A	39
9	电机防护等级Motor Enclosure	IP	64
10	驱动轮轮径Wheel diameter	mm	254
11	驱动轮速比Gear ratio	i	21.3
12	驱动轮速度Wheel speed	m/min	112.33
13	驱动轮扭矩Wheel torque	N.m	95.85
14	驱动轮载荷Wheel load	kg	1500
15	制动器电压Brake voltage	V DC	24
16	制动器功率Brake power	W	14.4
17	制动器扭矩Brake torque	N.m	12
18	工作制Work system	S2	
19	润滑材料Lubricating material	润滑油Lubricating oil	
20	编码器类型 Encoder type	增量式Incremental	
21	编码器分辨率Encoder resolution	2500ppr	
22	转向部分Steering unit		
23	电机类型Motor type	伺服电机Servo motor	
24	额定电压Rated Voltage	V DC	48
25	额定功率Rated power	W	400
26	额定扭矩Rated torque	N.m	1.27
27	峰值扭矩Peak torque	N.m	3.81
28	额定转速Rated speed	rpm	3000
29	额定电流Rated Current	A	10
30	电机防护等级Motor Enclosure	IP	65
31	最大转向速度Peak speed	°/sec	90
32	转向减速机速比Gear ratio	i	25
33	转向机构速比Steering ratio	i	8
34	工作制Work system	S2	
35	编码器类型 Encoder type	绝对值absolute	
36	编码器分辨率Encoder resolution	17bit	
37			
38	舵轮重量Weight	kg	77
39	最大回转半径Turning radius(Max)	mm	150

图纸确认栏Confirmation	名 称:Name	立式舵轮Vertical Drive Wheel
	型 号:Model	PV250DS-A1-020-01
	代 号:Code	52253-A1-020-01
	页 次:Page	1

凤凰动力 PHOENIX POWER